CITY OF RICHLAND
DEVELOPMENT SERVICES DEPARTMENT
625 Swift Boulevard, MS-35
Richland, WA 99352
Telephone 509- 942-7794
Fax 509- 942-7764
CI.RICHLAND.WA.US · 509-942-7390
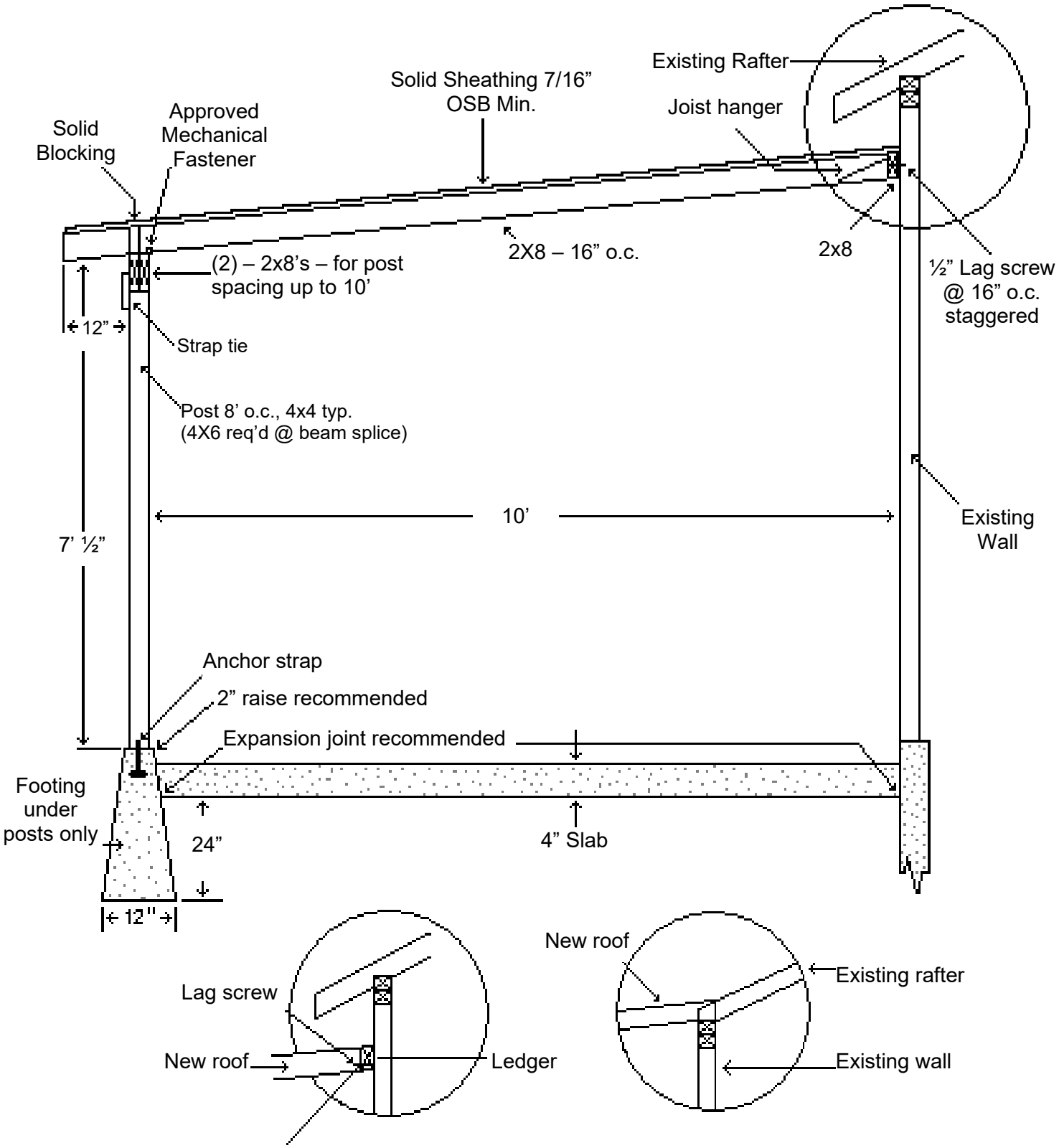
# TYPICAL ATTACHED CARPORT OR PATIO ROOF