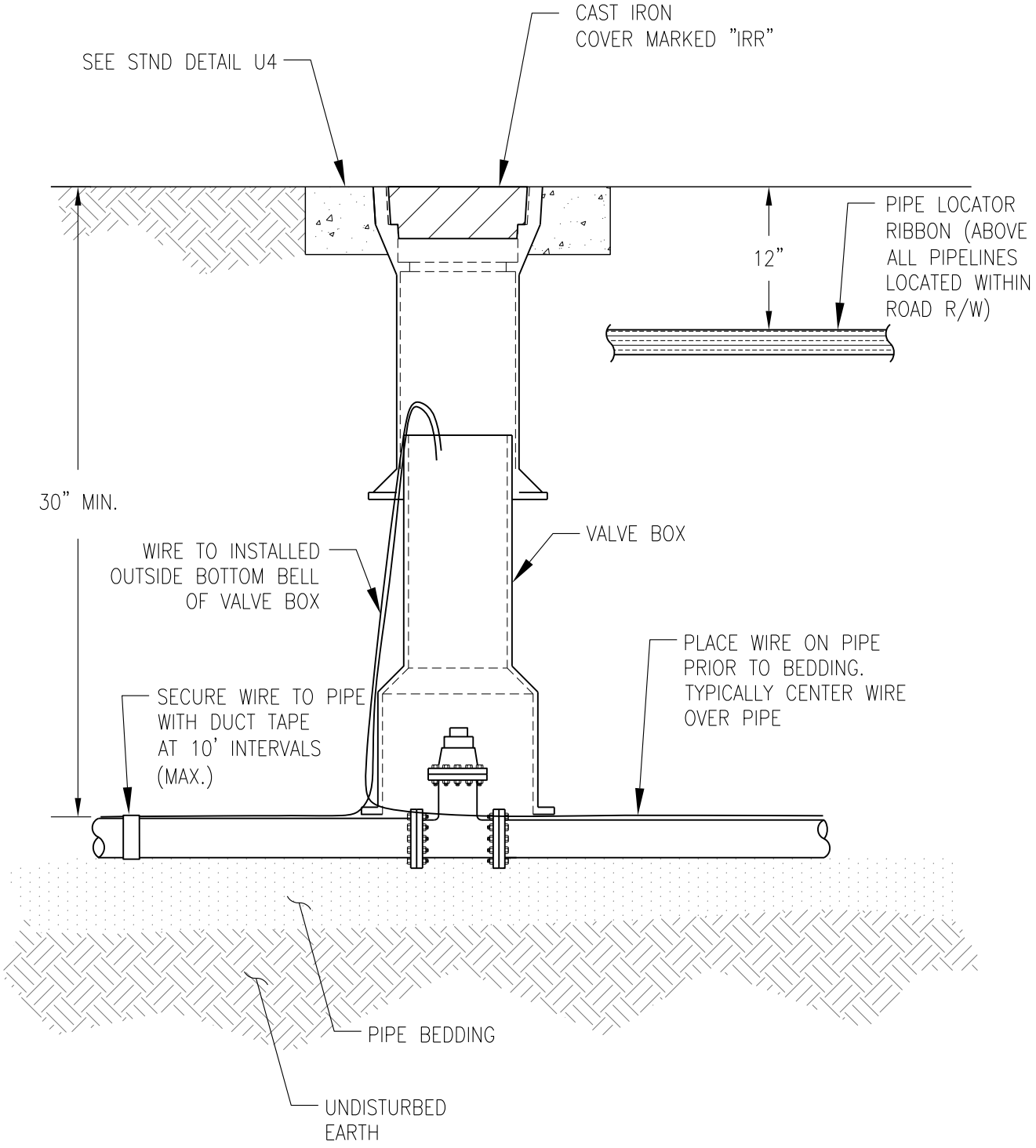

ELEVATION

Richland Washington	IRRIGATION DISTRIBUTION VALVE ASSEMBLY	PUBLIC WORKS ENGINEERING
		APPR. BY: PKR — DATE: 12.2010
		DRAWN BY: SC NYBY — DWG: IRR3
		CAD FILE: 2012_IRR3_12_2010