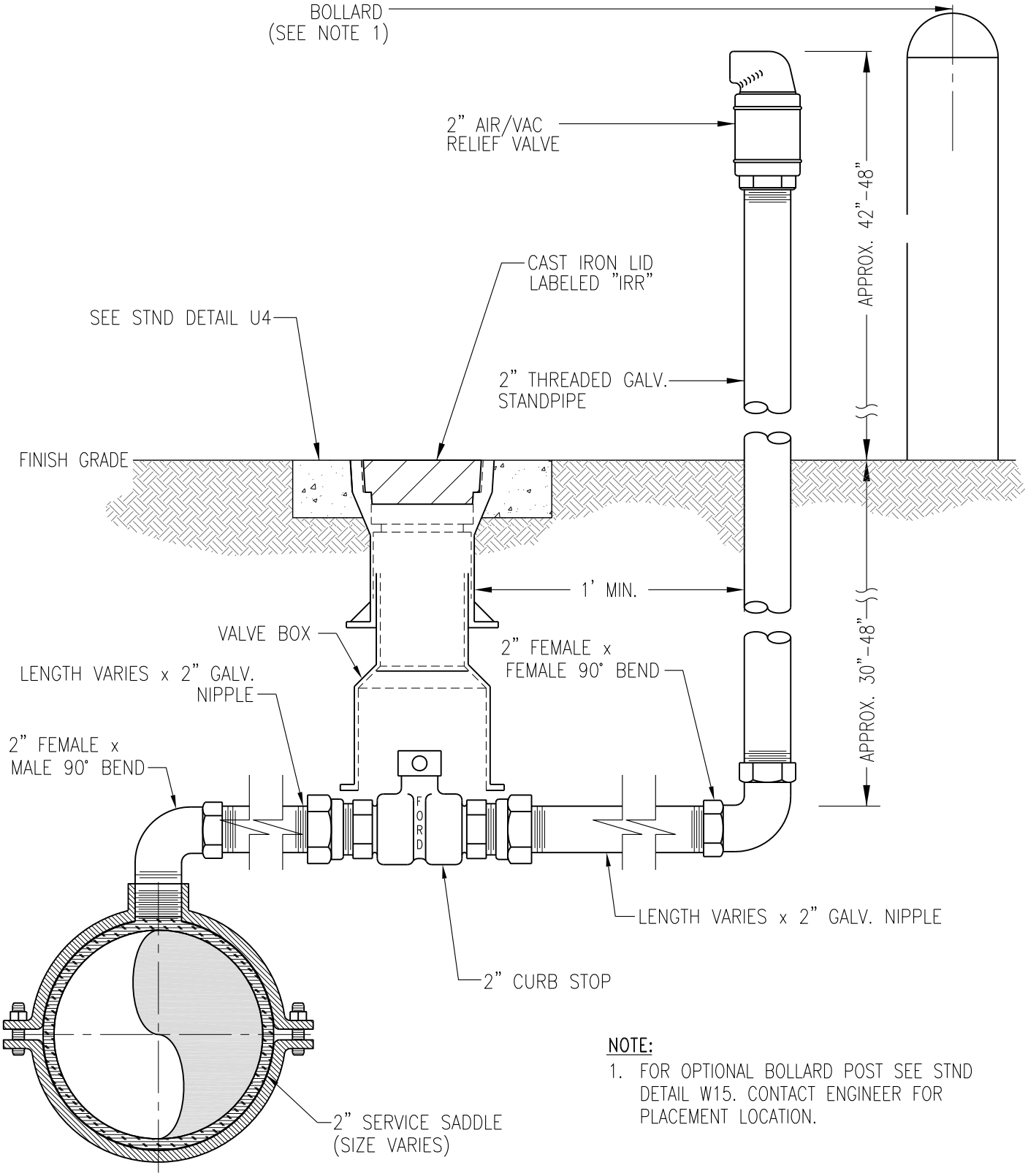

NOTE:

1. FOR OPTIONAL BOLLARD POST SEE STND DETAIL W15. CONTACT ENGINEER FOR PLACEMENT LOCATION.

IRRIGATION DISTRIBUTION AIR/VAC CONNECTION

PUBLIC WORKS ENGINEERING	
APPR. BY: PKR	DATE: 11.15
DRAWN BY: LD	DWG: IRR7
CAD FILE: 2012_IRR7_11_2015	