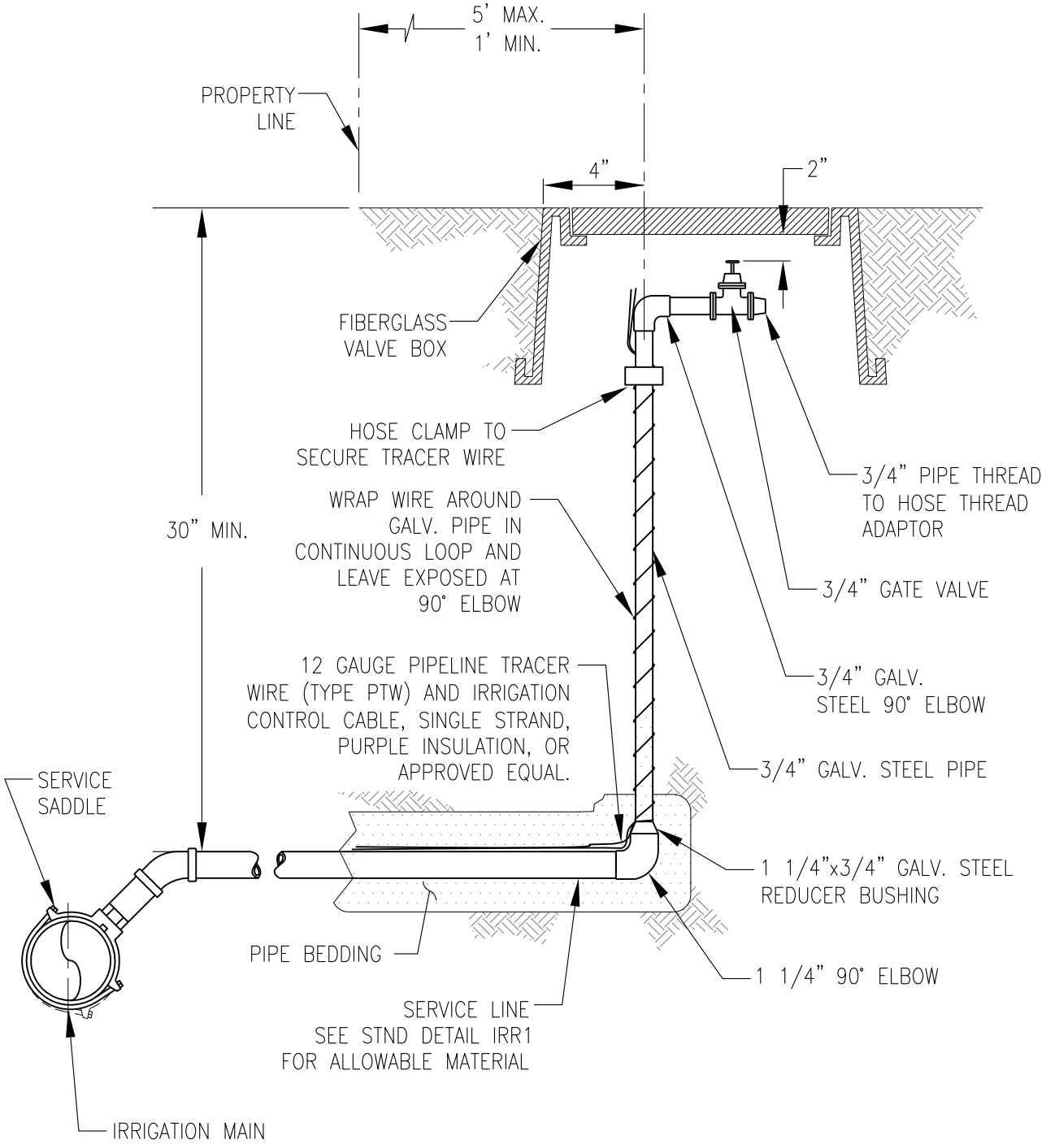

IRRIGATION DISTRIBUTION SERVICE RISER

PUBLIC WORKS ENGINEERING	
APPR. BY: PKR	DATE: 11.15
DRAWN BY: LD	DWG: IRR6
CAD FILE: 2013_IRR6_11_2015	