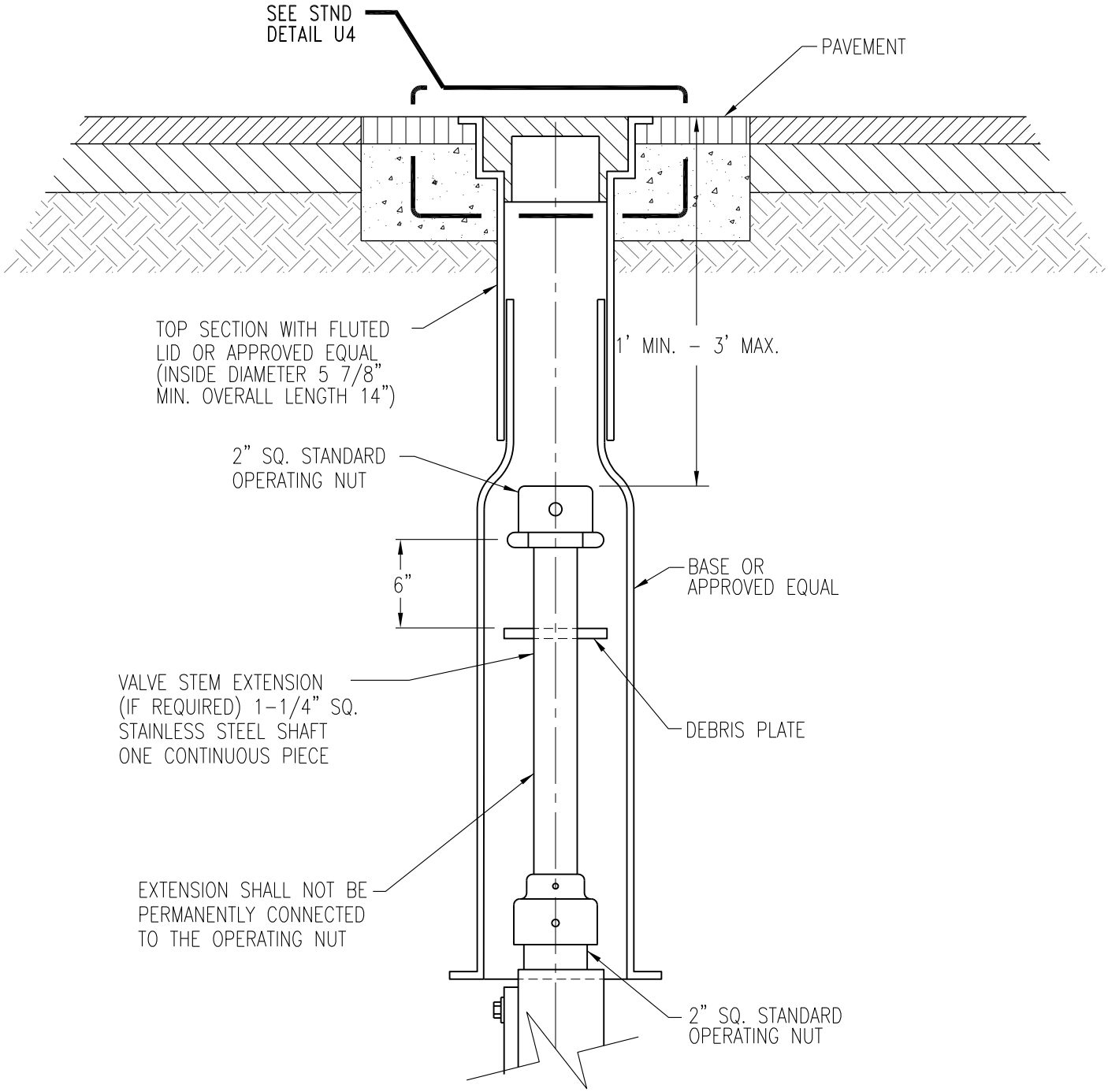

WATER VALVE BOX

PUBLIC WORKS ENGINEERING	
APPR. BY: PKR	DATE: 12.2010
DRAWN BY: SC NYBY	DWG: W9
CAD FILE: 2012_W9_12_2010	